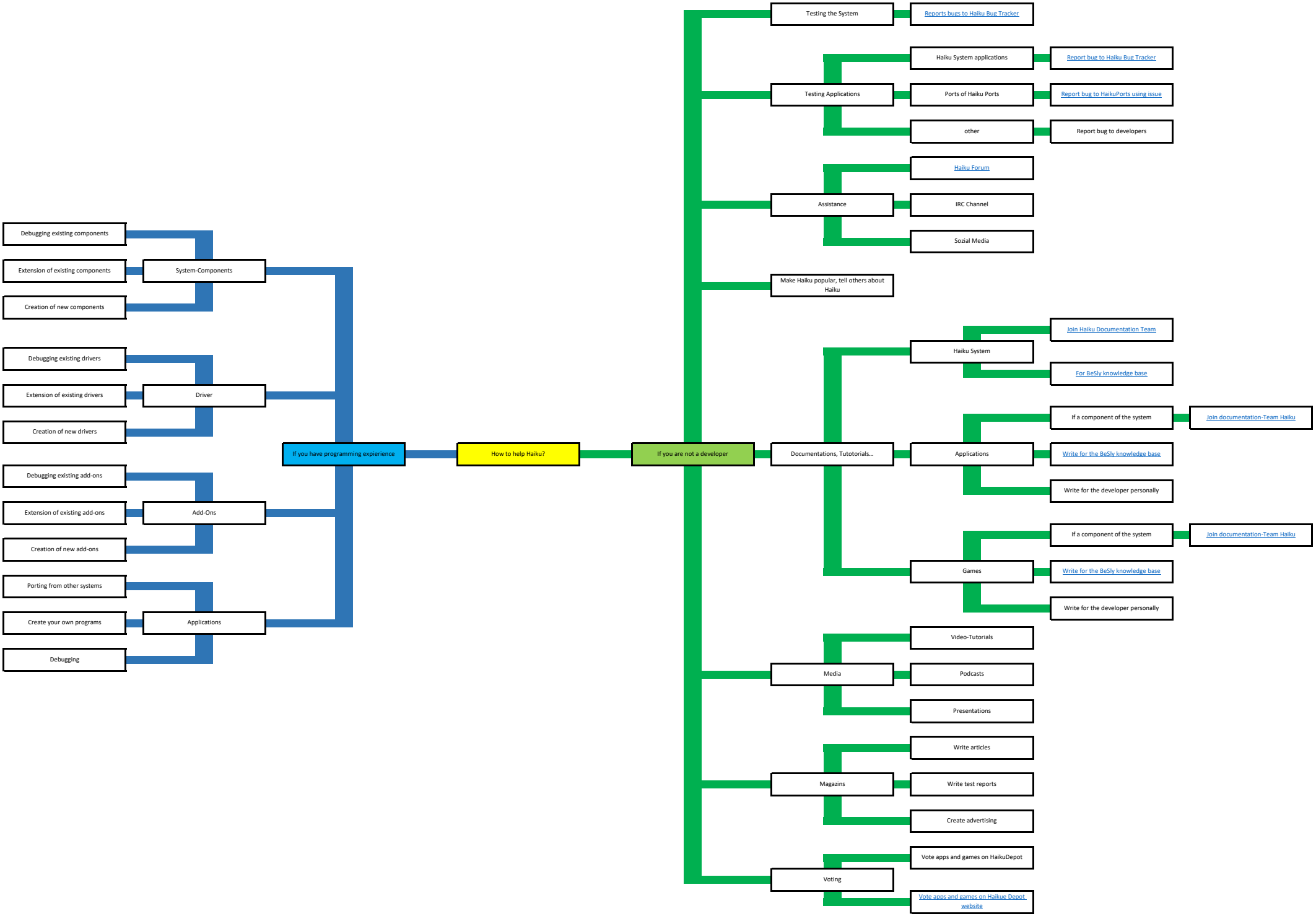
How to help Haiku?
If you have programming expierience
System-Components
Debugging existing components
Extension of existing components
Creation of new components
Driver
Debugging existing drivers
Extension of existing drivers
Creation of new drivers
Add-Ons
Debugging existing add-ons
Extension of existing add-ons
Creation of new add-ons
Applications
Porting from other systems
Create your own programs
Debugging
If you are not a developer
Testing the System
Reports bugs to Haiku Bug Tracker
Testing Applications
Haiku System applications
Report bug to Haiku Bug Tracker
Ports of Haiku Ports
Report bug to HaikuPorts using issue
other
Report bug to developers
Assistance
Haiku Forum
IRC Channel
Sozial Media
Make Haiku popular, tell others about Haiku
Documentations, Tutotorials...
Haiku System
Join Haiku Documentation Team
For BeSly knowledge base
Applications
If a component of the system
Join documentation-Team Haiku
Write for the BeSly knowledge base
Write for the developer personally
Games
If a component of the system
Join documentation-Team Haiku
Write for the BeSly knowledge base
Write for the developer personally
Media
Video-Tutorials
Podcasts
Presentations
Magazins
Write articles
Write test reports
Create advertising
Voting
Vote apps and games on HaikuDepot
Vote apps and games on Haikue Depot website